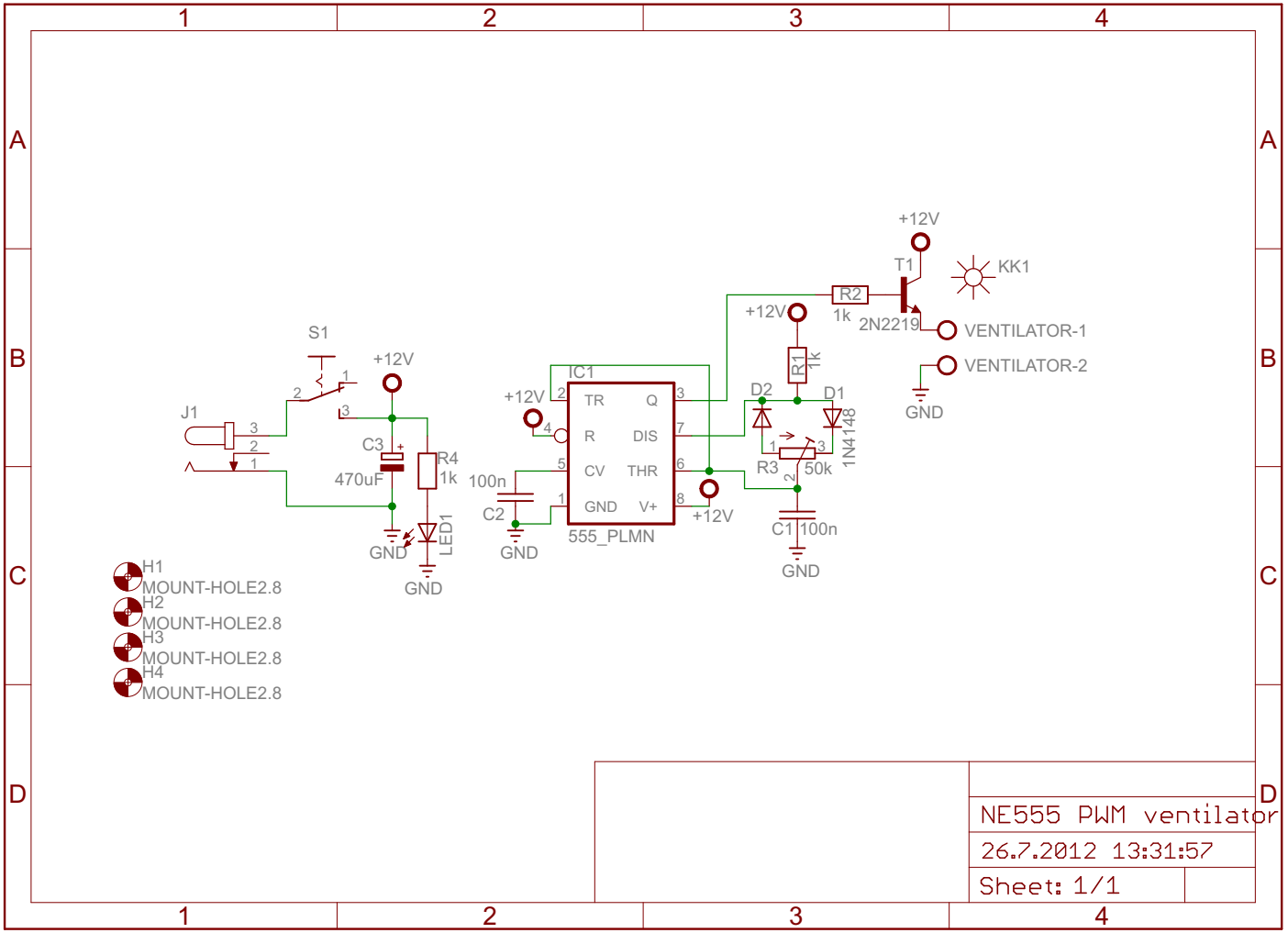
S1
+12V
J1
C3
470uF
R4
1k
LED1
GND
IC1
TR
Q
R
DIS
CV
THR
GND
V+
555_PLMN
100n
C2
R1
1k
D2
D1
1N4148
R3
50k
C1
100n
T1
2N2219
R2
1k
KK1
VENTILATOR-1
VENTILATOR-2
H1
MOUNT-HOLE2.8
H2
MOUNT-HOLE2.8
H3
MOUNT-HOLE2.8
H4
MOUNT-HOLE2.8
NE555 PWM ventilator
26.7.2012 13:31:57
Sheet: 1/1